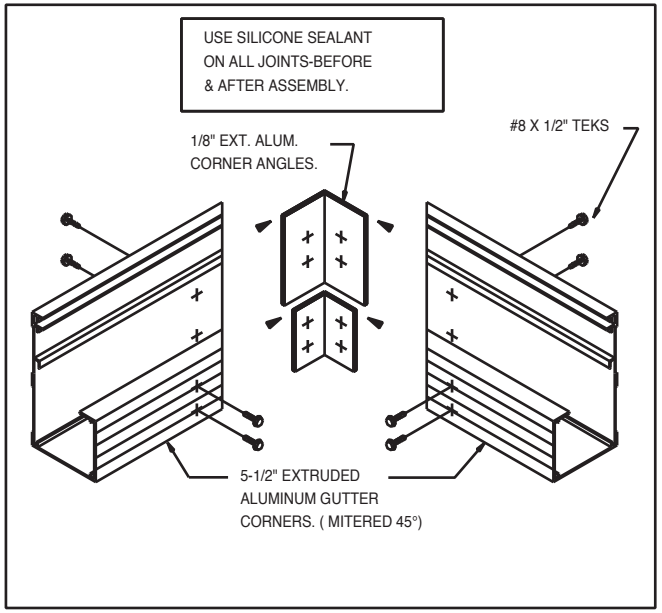

CORNER ASSEMBLY

(FASCIA / GUTTER)

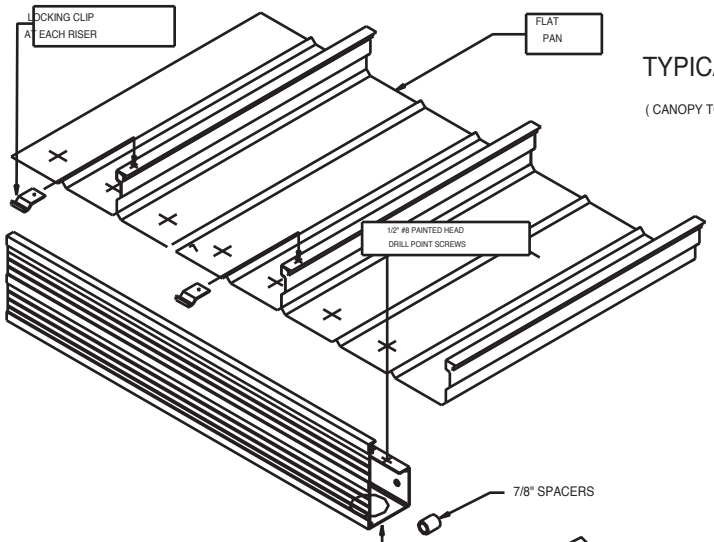

TYPICAL ASSEMBLY

(CANOPY TOP)

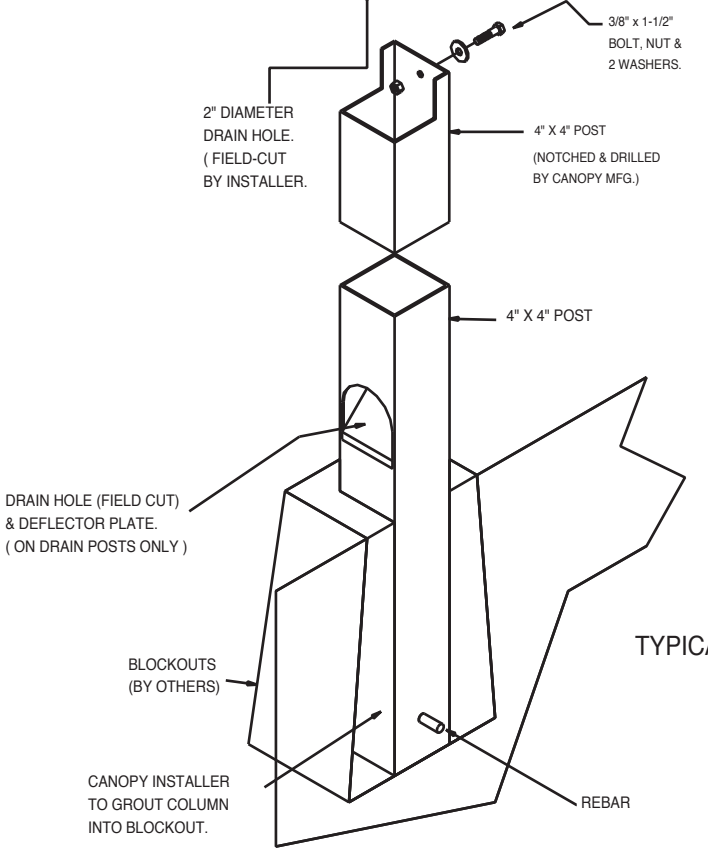

TYPICAL FOOTING

SUPERIOR METAL PRODUCTS LLC

877-445-1200 • 205-945.5694
www.smp.com

SUPERIOR METAL PRODUCTS LLC

CANOPY DETAIL POST UNDER GUTTER